ABLOY® ELECTRIC LOCKS

Scandinavian range

Trusted for a Reason

ABLOY

TRUSTED FOR A REASON

ABLOY Electric locks have over 40 years of trust, innovation and dedication to engineering excellence that is part of our Finnish DNA and heritage. Our products are designed for high-end security and sustainability, with precision performance under all operational conditions. ABLOY Scandinavian range locks are designed to match the regulations and dimensions of the Scandinavian markets.

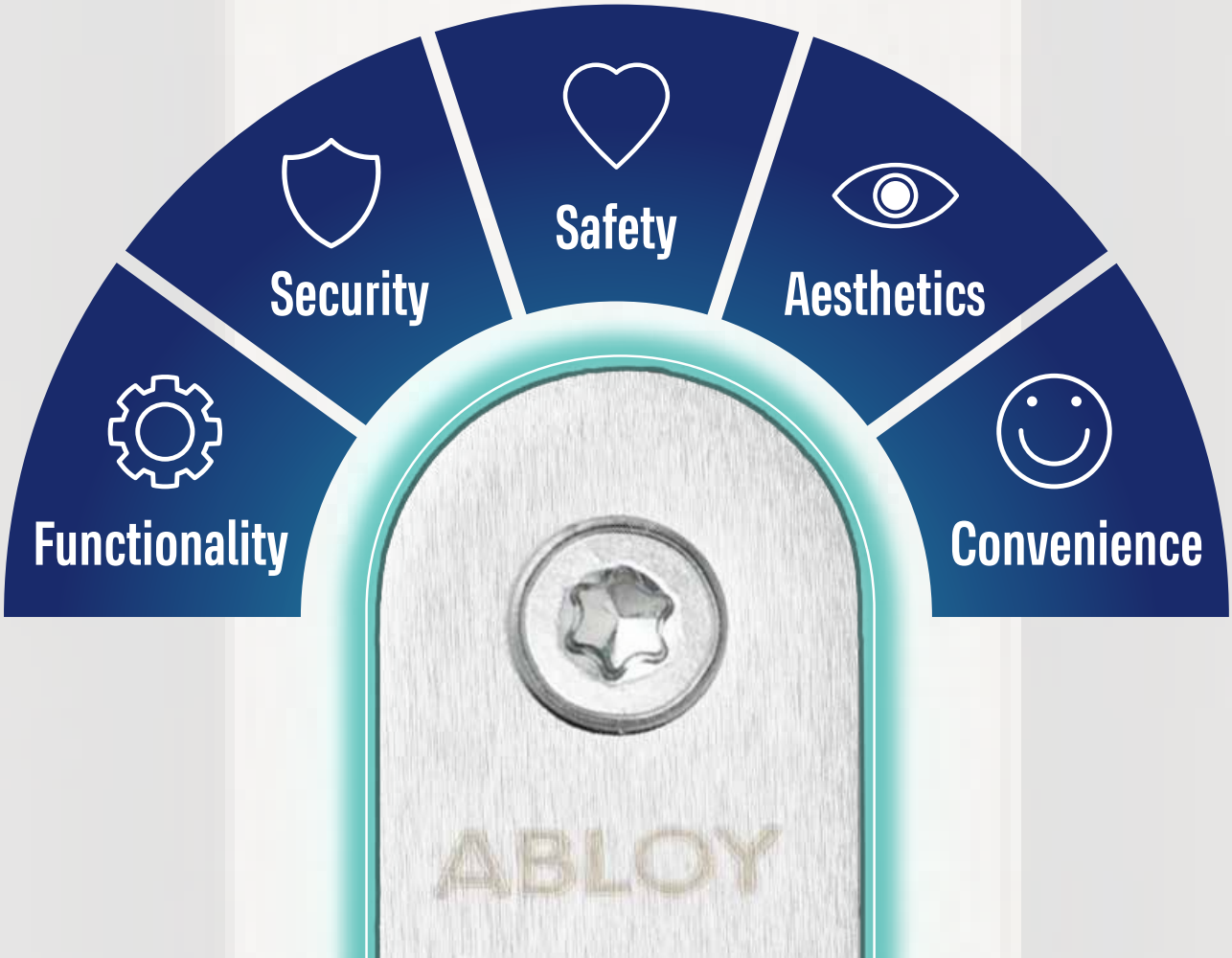

Why to choose ABLOY Electric locks

Compared to other solutions like magnet locks or electric strikes, Electric locks give long-lasting security that will not wear out. Still electric locking provides ultimate mechanical strength but uses power only while opening.

With ABLOY Electric locks you get

1. Wide product range
2. Complete solution
3. Premium level of security
4. Energy saving
5. Safety with standards approvals
6. Aesthetic appearance
7. User friendliness
8. More functions

Hi-O Technology™ on select products

Hi-O is an Assa Abloy standard which connects electronic door components together over controller area network (CAN bus), allowing the syncronisation of door operation, monitoring and diagnostics. Connected through 4-wire cable (two for power and two for data).

Hi-O increases Electric Locks' security and make them also easier install. Several locks can also be connected to same control unit, or locks can be connected to EAC controller directly (if system supports Hi-O).

Hi-O TECHNOLOGY™

Trusted to Protect

ABLOY has delivered more than 3 million Electric locks to locations all over the world securing World Heritage Sites, valuable assets and premises where quick and reliable evacuation is a must.

FINNISH NATIONAL GALLERY, HELSINKI

WARSAW STADIUM

NOKIA ARENA, TAMPERE, FINLAND

PRESIDENTIAL PALACE, ABU DHABI

MUVE, VENICE, ITALY

BANK OF FINLAND

CASINO HOTEL, MACAU, CHINA

Every Choice Has an Impact

Sustainability is embedded in everything we do from product innovation and constant development of environmentally friendly production technologies to all aspects of our business. To build confidence in a better tomorrow, we are constantly improving our own operations towards a more sustainable direction, where carbon neutrality by 2025 is just the beginning.

Awarded for sustainability, ABLOY Electric locks have sustainability and low energy consumption built into every process and product. Using energy only when in use and certified according to all the required global standards, Electric locks are the most durable and sustainable part of your locking system.

Learn more and join us on our journey for a sustainable future:
ABLOY.COM/SUSTAINABILITY

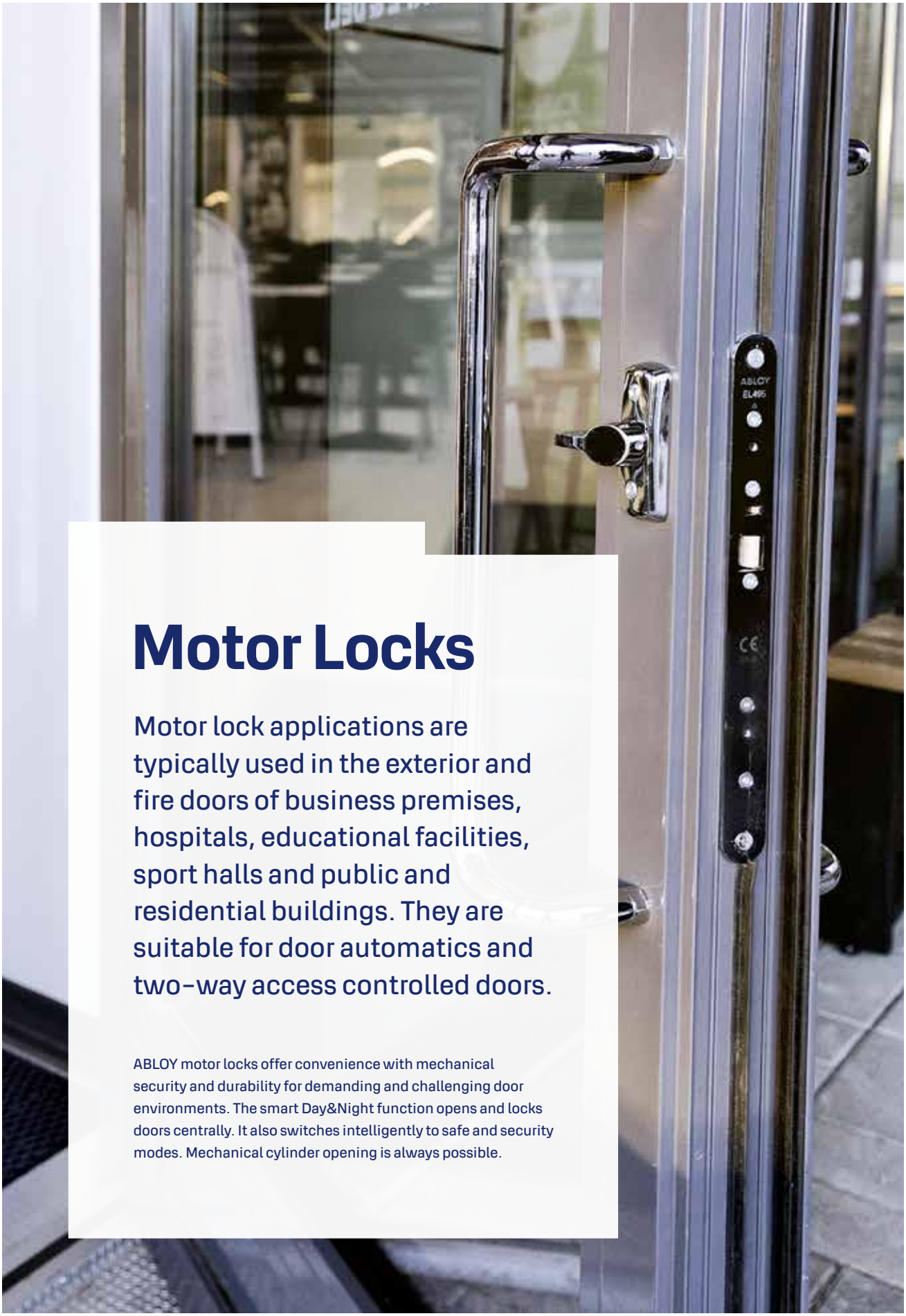

Motor Locks

Motor lock applications are typically used in the exterior and fire doors of business premises, hospitals, educational facilities, sport halls and public and residential buildings. They are suitable for door automatics and two-way access controlled doors.

ABLOY motor locks offer convenience with mechanical security and durability for demanding and challenging door environments. The smart Day&Night function opens and locks doors centrally. It also switches intelligently to safe and security modes. Mechanical cylinder opening is always possible.

ABLOY MOTOR LOCKS

EL595 range

EL595 = 1-way access controlled doors: the handle is not controlled. The lock can always be opened with the handle (EN179 certified).
PE590 EN1125 certified.
PE592 EN1125 certified, double doors

EL595FU = 2-way access controlled doors: the handle is electrically controlled and activated in the event of a fire. *)

EL595FL = 2-way access controlled doors: the handle is electrically controlled and is deactivated in the event of a power cut. *)

*) **Key feature: Self-awareness**
When the lock´s ability of functioning is lowered, the lock case will give an audible warning allowing the lock to be replaced/ repaired before it stops functioning.

Door type: SOLID ACTIVE
Usage level: HIGH
Security level: HIGH

- **Exit door suitability** (only EL595)
- **Fire door suitability**
- **Automation suitability**

TECHNICAL SPECIFICATIONS

Operating voltage: 12 - 24 V DC (-10%/+15%, stab.)
Temperature range: -25 - +70 °C
Bolt throw: 14 or 20 mm
Backset: 50 mm
Forend: 22 mm, bright chrome
Spindle: 8 mm
Monitoring outputs: Bolt deadlocked, handle down, bolt in

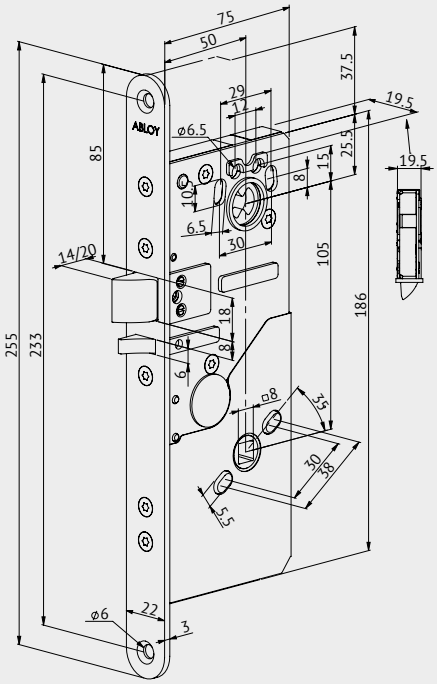

Certificates: EN14846 (for electromechanically operated locks), EN179 (for emergency exit doors), EN1634-1 (for fire resistance), SS3522 (for fire resistance and security)

ABLOY MOTOR LOCKS

EL495 range

EL495 = 1-way access controlled doors: the inside handle is not controlled. The lock can always be opened with an inside handle or panic bar (EN179 and EN1125 certified).

EL495FU = 2-way access controlled doors: the handle is electrically controlled and is activated in the event of a fire.

EL495FL = 2-way access controlled doors: the handle is electrically controlled and is deactivated in the event of a power cut.

Door type: PROFILE ACTIVE
Usage level: HIGH
Security level: HIGH

- **Exit door suitability** (only EL495)
- **Fire door suitability**
- **Automation suitability**

TECHNICAL SPECIFICATIONS

Operating voltage: 12 – 24 V DC (-10%/+15%, stab.)
Temperature range: -25 – +70 °C
Bolt throw: 14 mm
Backset: 29/35 mm
Forend: 25 mm, bright chrome
Spindle: 8 mm
Monitoring outputs: Bolt deadlocked, handle down, bolt in

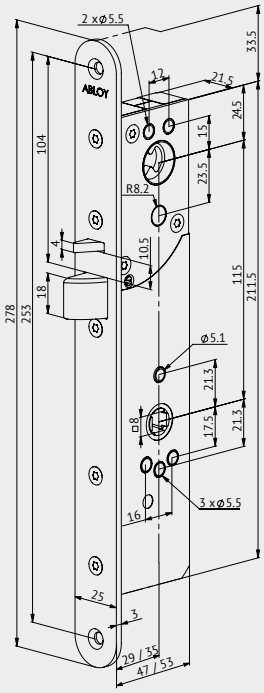

Certificates: EN14846 (for electromechanically operated locks), EN179 (for emergency exit doors), EN1125 (for panic exit doors), EN1634-1 (for fire resistance)

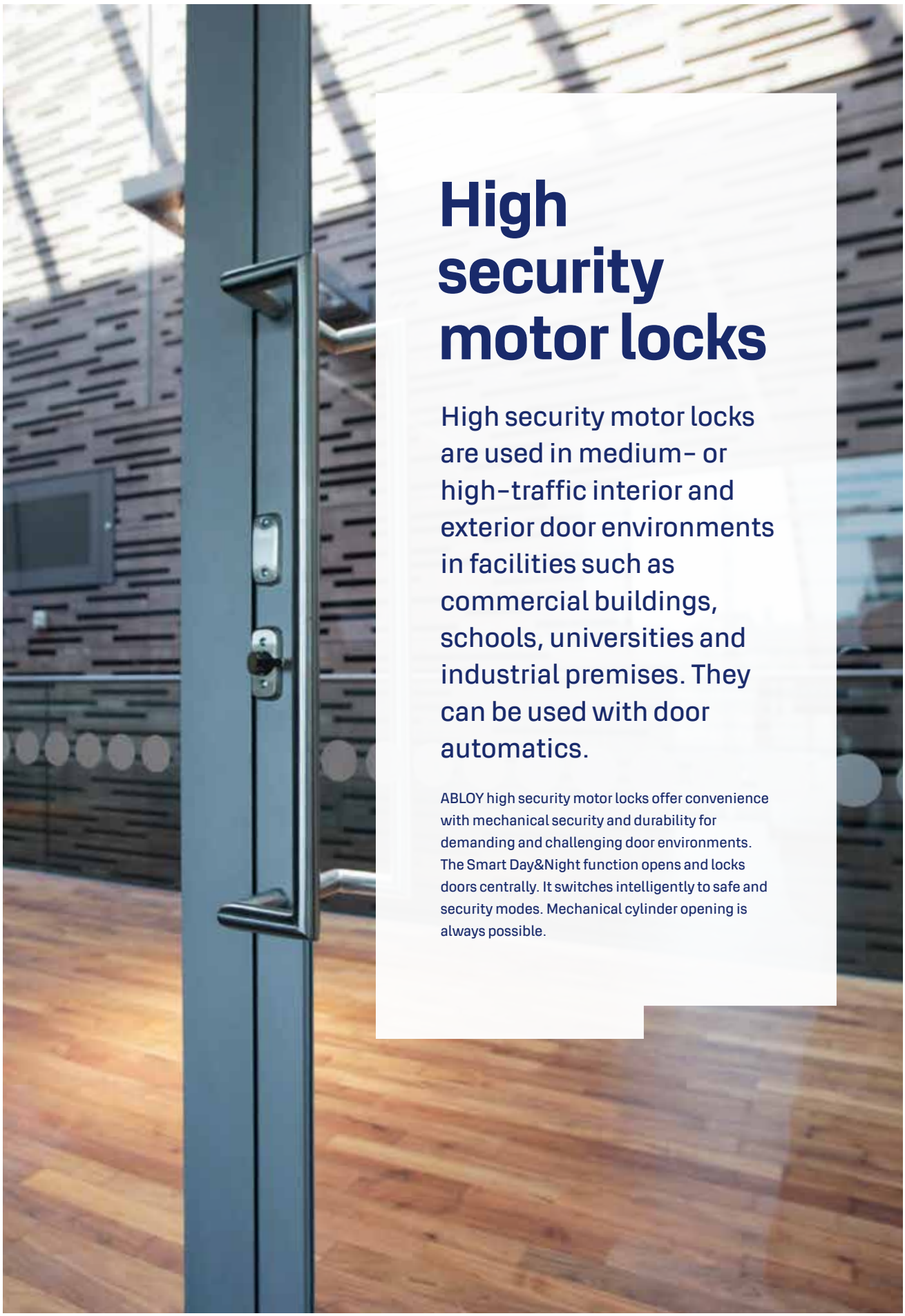

High security motor locks

High security motor locks are used in medium- or high-traffic interior and exterior door environments in facilities such as commercial buildings, schools, universities and industrial premises. They can be used with door automatics.

ABLOY high security motor locks offer convenience with mechanical security and durability for demanding and challenging door environments. The Smart Day&Night function opens and locks doors centrally. It switches intelligently to safe and security modes. Mechanical cylinder opening is always possible.

ABLOY MOTOR LOCKS

EL654 range

EL654 = High security exterior or interior narrow stile doors which are unlocked during the day and need high-security locking at night. One control unit can control several EL654s with a daytime lock (max. 4 pieces). The data bus can be encrypted.

EL648 = High security exterior or interior narrow stile doors which are unlocked during the day and need high-security locking at night. To be used as an auxiliary lock. Also suitable for applications where the door contact needs to be elsewhere than the strike plate.

EL654 IS HI-O PRODUCT

HI-O TECHNOLOGY™

Door type: PROFILE ACTIVE
Usage level: MEDIUM
Security level: HIGH

- ✗ **Exit door suitability**
- ✓ **Fire door suitability** (EL654 compliant in fire door, when installed together with motor / handle controlled lock (day-lock))
- ✓ **Automation suitability**

TECHNICAL SPECIFICATIONS

Operating voltage: 12 - 24 V DC (-10%/+15%, stab.) EL654
12-18 VAC (-10%/+15%, RMS) EL648
Temperature range: -25 - +70 °C
Bolt throw: 22 mm
Backset: 25/35 mm
Forend: 25/32 mm, bright chrome
Spindle: 8 mm
Monitoring outputs: Bolt in, bolt deadlocked, door closed/open, manual use (EL648). Bolt in, bolt out, auxiliary lock locked/open, door closed/open (EL654)

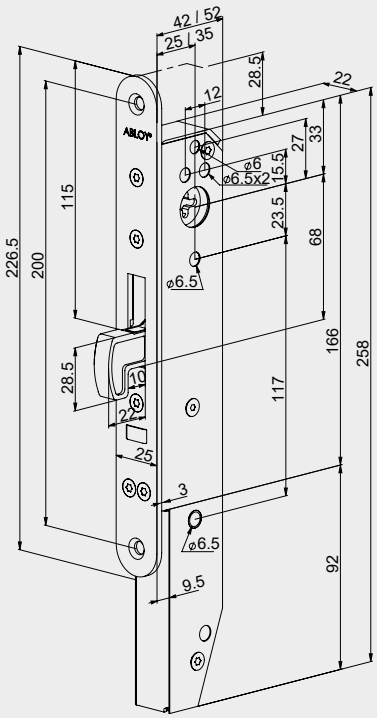

Certificates: EN14846 (for electromechanically operated locks), SS3522 (for fire resistance and security)

ABLOY MOTOR LOCKS

EL572 range

EL572 = High security lock for night use in places with high security demand, such as offices and industrial premises. This lock can be used as daytime lock and electrically locked at night time. Hook bolt and latch bolt. One indication, bolt out (potential free). The deadbolt is electrically controlled. For stand-alone use.

EL573 = This lock should be supplemented with another lock for high frequency day use, for example the EL580. Hook bolt. One indication, bolt out (potential free). The deadbolt is electrically controlled.

Door type: SOLID ACTIVE
Usage level: MEDIUM
Security level: HIGH

✖ **Exit door suitability**

✔ **Fire door suitability** (EL573 compliant in fire door, when installed together with motor / handle controlled lock (day-lock))

✔ **Automation suitability** (only EL573)

TECHNICAL SPECIFICATIONS

Operating voltage: 24 V DC (+/-15%, stab.)
Temperature range: -25 - +70°C
Bolt throw: 14 mm latch and 20 mm dead bolt
Backset: 50 mm
Forend: 22 mm, bright chrome
Spindle: 8 mm
Monitoring outputs: Dead bolt out

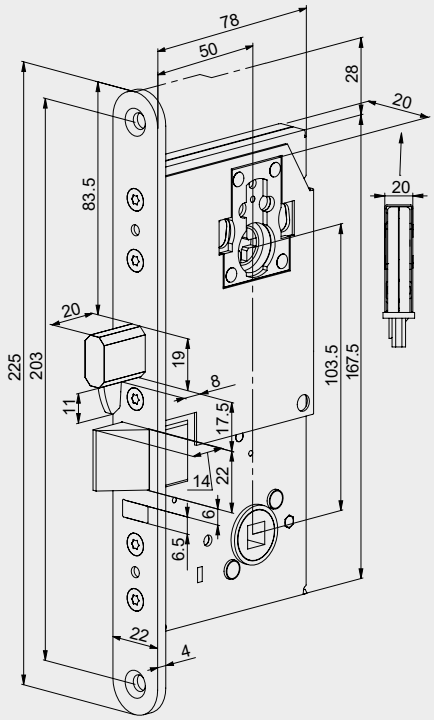

Certificates: EN14846 (for electromechanically operated locks), EN1634-1 (for fire resistance), SS3522 (for fire resistance and security)

ABLOY MOTOR LOCKS

EL574 range

EL574 = High security exterior or interior solid doors which are unlocked during the day and electrically locked at night. The handle is used during the day. Hook bolt and latch bolt.

EL575 = High security exterior or interior solid doors which are unlocked during the day and electrically locked at night.

This lock should be supplemented with another lock for high frequency day use, for example the EL580.

Door type: SOLID ACTIVE
Usage level: MEDIUM
Security level: HIGH

- ✖ **Exit door suitability**
- ✔ **Fire door suitability** (EL575 compliant in fire door, when installed together with motor / handle controlled lock (day-lock))
- ✔ **Automation suitability** (only EL575)

TECHNICAL SPECIFICATIONS

Operating voltage: 12 – 24 V DC (-10%/+15%, stab.)
12-18 VAC (-10%/+15%, RMS)
Temperature range: -25 – +70 °C
Bolt throw: 14 mm latch and 20 mm deadbolt
Backset: 50 mm
Forend: 22 mm, bright chrome
Spindle: 8 mm
Monitoring outputs: Deadbolt out, deadbolt in, door status

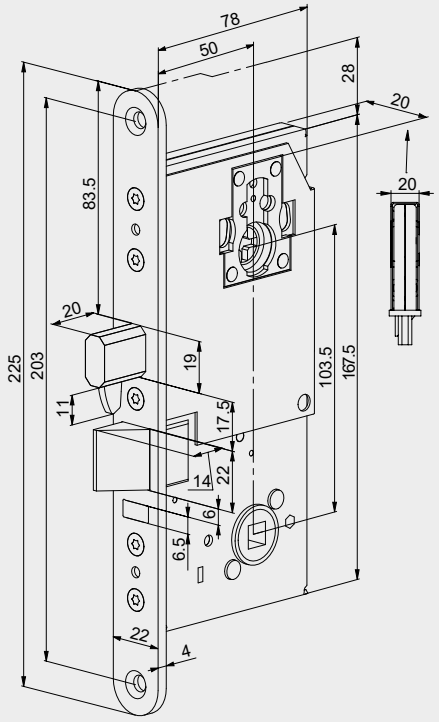

Certificates: EN14846 (for electromechanically operated locks), EN1634-1 (for fire resistance), SS3522 (for fire resistance and security)

ABLOY MOTOR LOCKS

EL754 range

EL754 = Suitable for exterior doors requiring high security. Especially suited for doors which are frequently used during the day. Includes two bolts which can be individually controlled. Ideal for use with access control systems and can be controlled by a variety of electrical impulse generating equipment such as card readers or timers.

EL755 = High security exterior or interior solid doors. A supplementary lock is recommended for high-frequency and day usage. Used with the DAC564 control unit.

THE WHOLE EL754 RANGE IS HI-O

HI-O TECHNOLOGY™

Door type: SOLID ACTIVE
Usage level: HIGH
Security level: HIGH

- ✖ **Exit door suitability**
- ✔ **Fire door suitability** (EL755 compliant in fire door, when installed together with motor / handle controlled lock (day-lock))
- ✔ **Automation suitability**

TECHNICAL SPECIFICATIONS

Operating voltage: 12 - 24 V DC (-10%/+15%, stab.)
Temperature range: -25 - +70 °C
Bolt throw: 14 mm latch and 20 mm deadbolt
Backset: 50 mm
Forend: 22 mm, bright chrome
Spindle: 8 mm
Monitoring outputs: Security bolt out, security bolt in, double-action latch bolt open/locked, door closed/open

Certificates: EN14846 (for electromechanically operated locks).

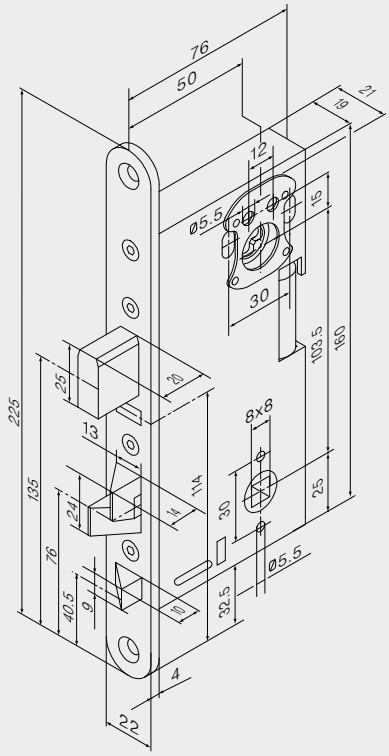

Handle Controlled Locks

Handle controlled electric locks are used in medium traffic interior door environments such as offices, consulting, storage and technical maintenance rooms, and in the exterior doors of residential buildings. Not suitable with door automatics.

The lock can be set to function as fail-locked (fail-secure) or fail-unlocked (fail-safe). In the fail-locked setting, the lock can be opened with the handle when the power is on and cannot be opened with the handle when the power is off. In the fail-unlocked setting, the electrical function is reversed. Locks are automatically deadlocked when the door is closed. Mechanical cylinder opening is always possible.

ABLOY HANDLE CONTROLLED LOCKS

EL580 range

EL580 = 1-way access controlled doors: the outside handle is electrically controlled. The lock can always be opened with the inside handle (EN179 certified).

PE580 = 1-way access controlled doors: the outside handle is electrically controlled. The lock can always be opened with the inside panic bar (EN1125 certified).

EL582 = 2-way access controlled doors: both inside and outside handles are electrically controlled.

EL587 = 1-way access controlled doors: the outside handle is electrically controlled. The lock can always be opened with the inside handle (EN179 certified).

EL588 = 2-way access controlled doors: both inside and outside handles are electrically controlled.

Door type: SOLID ACTIVE
Usage level: MEDIUM
Security level: MEDIUM

- **Exit door suitability** (only EL580, PE580 and EL587)
- **Fire door suitability**
- **Automation suitability**

EL587, EL588 ARE HI-O PRODUCTS

HI-O TECHNOLOGY™

TECHNICAL SPECIFICATIONS

Operating voltage: 12 – 24 V DC (-10%/+15%, stab.)
Temperature range: -25 – +70 °C
Bolt throw: 14 or 20 mm (EL580, EL582), 14 mm (PE580)
Backset: 50/70 mm (EL580, EL582), 50 mm (PE580)
Forend: 22 mm, bright chrome
Spindle: 8 mm
Monitoring outputs: Bolt deadlocked, handle down/RQE

Certificates: EN14846 (for electromechanically operated locks), EN179 (for emergency exit doors), EN1125 (for panic exit doors), SS3522 (for fire resistance and security)

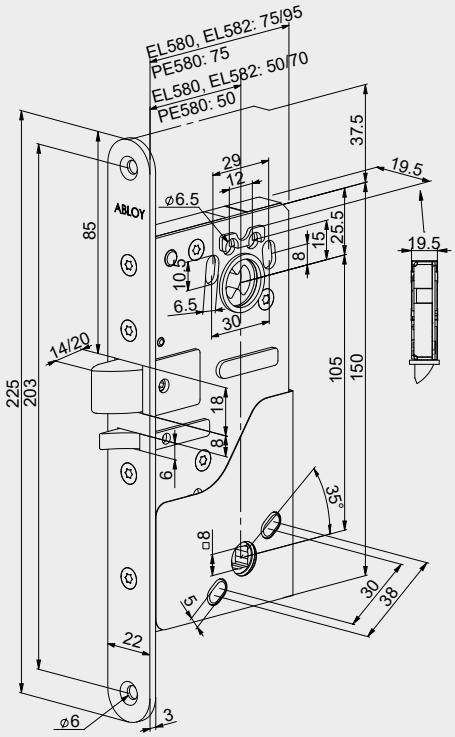

ABLOY HANDLE CONTROLLED LOCKS

EL480 range

EL480 = 1-way access controlled profile doors: the outside handle is electrically controlled. The lock can always be opened with the inside handle (EN179 or EN1125 certified).

EL482 = 2-way access controlled profile doors: both inside and outside handles are electrically controlled.

Door type: PROFILE ACTIVE
Usage level: MEDIUM
Security level: MEDIUM

- ✔ **Exit door suitability** (only EL480)
- ✔ **Fire door suitability**
- ✖ **Automation suitability**

TECHNICAL SPECIFICATIONS

Operating voltage: 12 - 24 V DC (-10%/+15%, stab.)
Temperature range: -25 - +70 °C
Bolt throw: 14 mm
Backset: 29/35 mm
Forend: 25 mm, bright chrome
Spindle: 8 mm
Monitoring outputs: Bolt deadlocked, handle down (RQE)

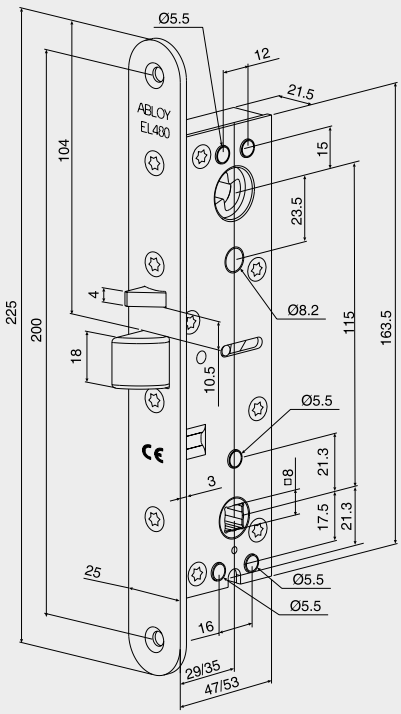

Certificates: EN14846 (for electromechanically operated locks), EN179 (for emergency exit doors), EN1125 (for panic exit doors).

Push & Pull Function Solenoid Locks

Thanks to the Push & Pull feature, doors can be conveniently opened and closed – even without using the door handle. The Push & Pull feature can also be integrated with your door automatics for convenience and smooth people flow.

The lock can be opened by pushing or pulling when the electric control is switched on. Some models can also be configured to operate in fail-unlocked mode. In this case, the door can be opened by pushing or pulling when the electric control is switched off. The lock can always be opened with a key or thumbturn, and it deadlocks automatically when the door closes.

ABLOY PUSH & PULL LOCKS

EL502

EL502 = The EL502 meets exit standard EN179 when installed with the ABLOY CY077 cylinder and a push bar. The door can be opened by pulling or pushing when the lock has been unlocked electrically. The door can always be opened with the key, the interior thumbturn or the push pad. Generally used in interior doors of offices, business premises and educational premises. Cannot be used with fire-rated doors. Can be used with exit doors.

Door type: SOLID ACTIVE
Usage level: MEDIUM
Security level: MEDIUM

- ✔ **Exit door suitability**
- ✖ **Fire door suitability**
- ✔ **Automation suitability**

TECHNICAL SPECIFICATIONS

Operating voltage: 12 – 24 V DC (-10%/+15%, stab.)
Temperature range: -25 – +70 °C
Bolt throw: 14.5 mm (latch)
Backset: 50 mm
Forend: 22 mm, bright chrome
Monitoring outputs: Double-action bolt deadlocking status
Versions:
FAIL SECURE -locked when power is off
FAIL SAFE – locked when power is on

Certificates: EN14846 (for electromechanically operated locks), EN179 (for emergency exit doors)

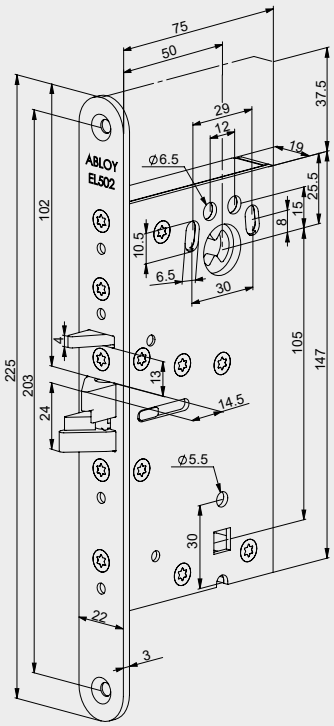

ABLOY PUSH & PULL LOCKS

EL402

EL402 = The door deadlocks when closed. The EL402 meets standard EN179 when used with the ABLOY CY080 cylinder. The door can always be opened with the key, the interior thumbturn or the push pad. Generally used in interior and exterior doors of business premises and in the exterior doors of apartment buildings. Cannot be used for fire-rated doors. Can be used in exit doors.

Door type: PROFILE ACTIVE
Usage level: MEDIUM
Security level: MEDIUM

- ✔ **Exit door suitability** (When installed with push pad PPE004)
- ✖ **Fire door suitability**
- ✔ **Automation suitability**

TECHNICAL SPECIFICATIONS

Operating voltage: 12 – 24 V DC (-10%/+15%, stab.)
Temperature range: -25 – +70 °C
Bolt throw: 14.5 mm (latch)
Backset: 25, 28, 30, 33, 35 mm
Forend: 25 mm, bright chrome
Spindle: 8 mm
Monitoring outputs: Double-action bolt deadlocking status
Versions:
FAIL SECURE -locked when power is off
FAIL SAFE – locked when power is on

Certificates: EN14846 (for electromechanically operated locks), EN179 (for emergency exit doors)

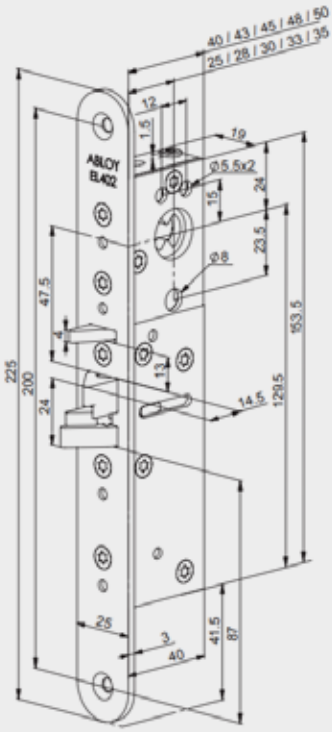

Double door solutions

ABLOY EXIT products offer a high security door environment with guaranteed easy exit in every situation. You can rely on the security these products provide against burglaries and other external threats, while knowing that exit safety is optimal.

The entire ABLOY EXIT product range is designed and officially tested according to the latest standards to ensure perfect function both in everyday use and in an emergency. ABLOY electric locks offer a complete high security solution wherever the electric security of access control combined with mechanical locking safety is needed, for example in fire and exit doors. Using the latest technology, we have developed ABLOY locks for double-leaf exit doors to bring safety and security to the most demanding door environments.

ABLOY DOUBLE DOOR SOLUTIONS

PE900 range for narrow profile doors

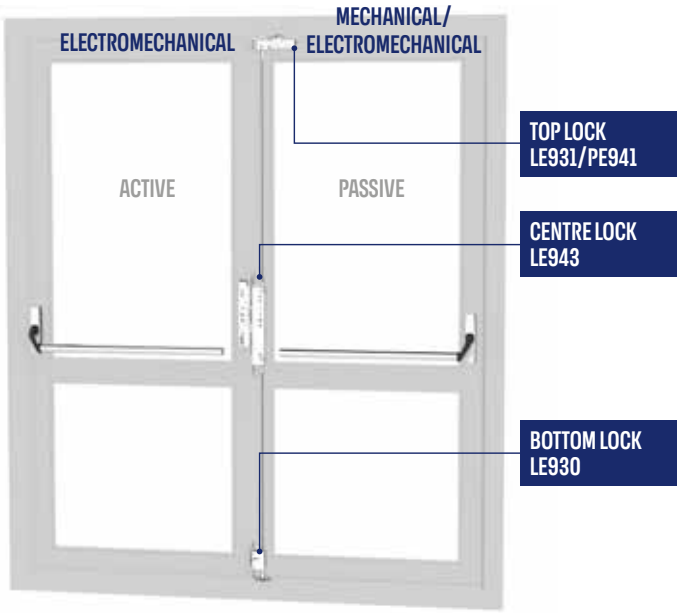

- **Exit door suitability**
- **Fire door suitability**
- **Automation suitability** (only EL495)

Door type: PROFILE PASSIVE
Usage level: HIGH
Security level: MEDIUM

A double door is when both doors are hinged to the exterior frames. One of the door will be the active door that is more commonly used, while the other is a passive door.

	Profile door			
Passive door	**Bottom latch**	**Top lock**	**Centre lock**	**Passive door package code**
Mechanical	LE930	LE931	LE943	PE900
Electric/Door automatics	LE930	PE941	LE943	PE903

TECHNICAL SPECIFICATIONS

Operating voltage: 12 – 24 V DC (–10%/+15%, stab.)
Temperature range: –25 – +70 °C
Bolt throw: 14 mm
Backset: 30 mm (active and passive)
Forend: Chrome plating
Spindle: 8 mm
Monitoring outputs: for the active side, see the previous pages which introduce individual products

Certificates: EN14846 (for electromechanically operated locks), EN179 (for emergency exit doors), EN1125 (for panic exit doors)

ABLOY DOUBLE DOOR SOLUTIONS

PE910 range for solid doors

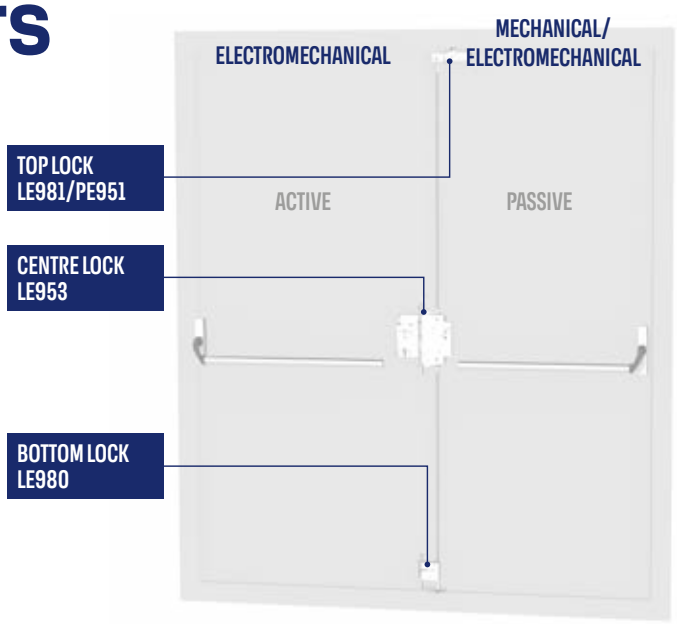

- **Exit door suitability**
- **Fire door suitability**
- **Automation suitability** (only PE592)

Door type: SOLID PASSIVE
Usage level: HIGH
Security level: MEDIUM

	Solid door			
Passive door	**Bottom latch**	**Top lock**	**Centre lock**	**Passive door package code**
Mechanical	LE980	LE981	LE953	PE910
Electric/Door automatics	LE980	PE951	LE953	PE913

TECHNICAL SPECIFICATIONS

Operating voltage: 12 – 24 V DC (–10%/+15%, stab.)
Temperature range: –25 – +70 °C
Bolt throw: 14 mm
Backset: 70 mm for passive middle lock; 50 mm active side
Forend: Chrome plating
Spindle: 8 mm
Monitoring outputs: for the active side, see the previous pages which introduce individual products

Certificates: EN14846 (for electromechanically operated locks), EN179 (for emergency exit doors), EN1125 (for panic exit doors)

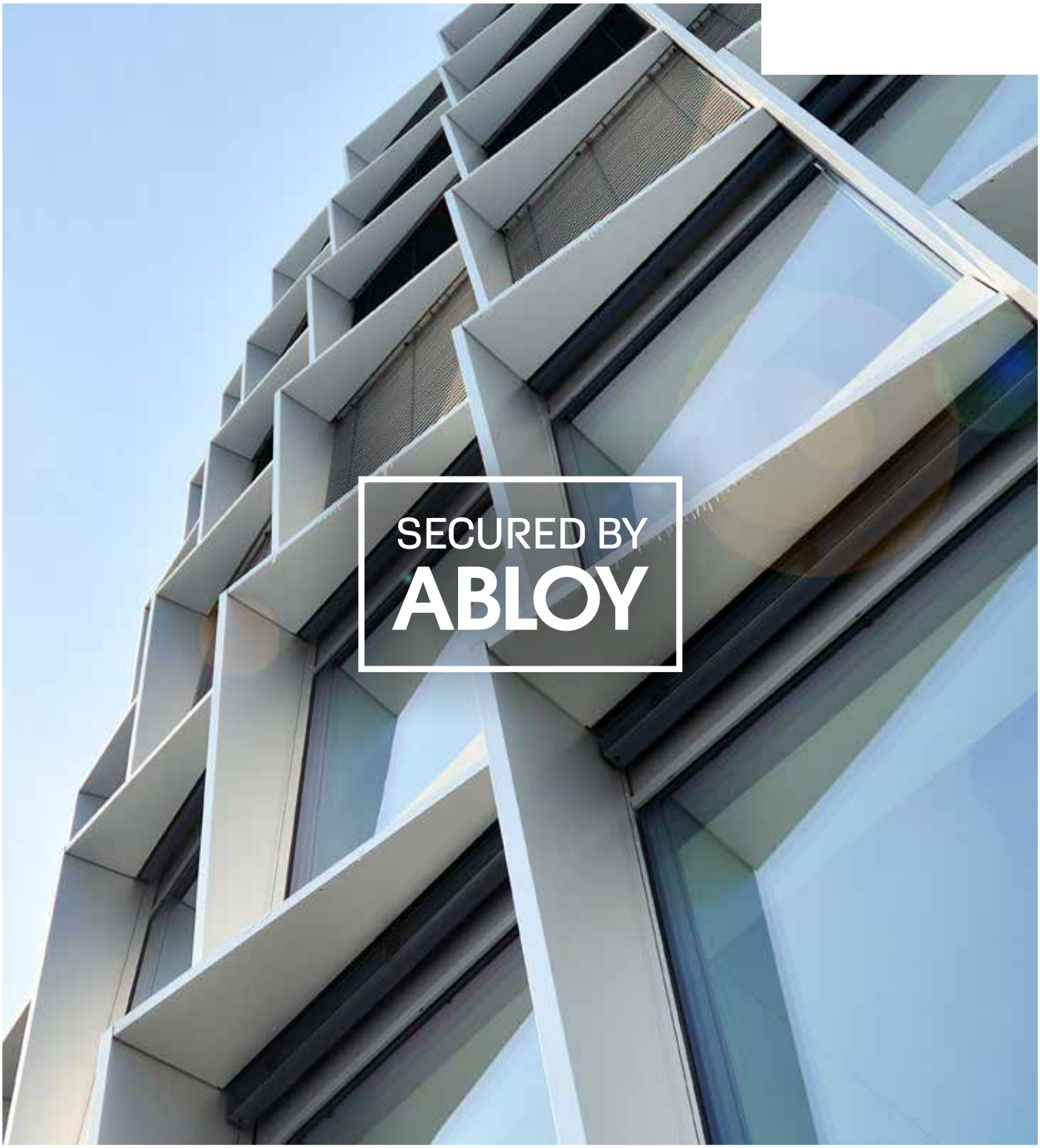

8805004 | 12/2025

ABLOY offers security and locking innovations dedicated to creating more trust in the world. Combining digital and mechanical expertise, Abloy Oy develops industry-leading security solutions that protect people, property and business. Abloy is part of the ASSA ABLOY Group, the global leader in access solutions. Every day, we help billions of people experience a more open world.

Abloy Oy
Wahlforssinkatu 20
P.O.Box 108
FI-80101 Joensuu
Finland
Tel. + 358 20 599 2501
Abloy.com

Abloy maintains Product Security Center at www.abloy.com/securitycenter. We recommend that you check the Center on a regular basis in order to be fully informed of product security updates, so that your knowledge of our products remains optimal.

It is the customer's responsibility to define the required level of security, whilst taking into consideration relevant factors for its operations. To achieve the overall level of security required in the customer's operations multiple layers of security must be in place. These include for example locking system, key management system, access management, CCTV and alarm system as well as physical security in a manner and level specified by the customer.

This content is protected by Intellectual Property Rights Laws. The title to the content shall not pass to you, and instead shall remain with Abloy Oy or a third party holding the title. Abloy develops continuously the products and solutions offered. Therefore, the information contained in the document is subject to change without notice. ABLOY PROVIDES THIS CONTENT ON AN "AS IS" BASIS WITHOUT ANY WARRANTIES OF ANY KIND EXPRESS, IMPLIED, OR STATUTORY."

MANAGEMENT SYSTEM CERTIFICATION
DNV
ISO 9001 • ISO 14001
ISO 45001 • ISO/IEC 27001

ABLOY

Part of ASSA ABLOY